REFERENCE PROJECT NUMBER	FISCAL YEAR	SHEET NUMBER

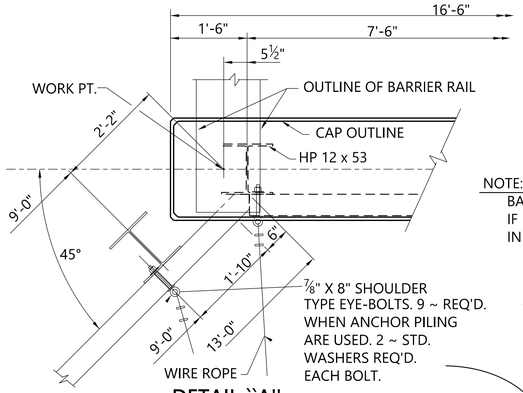

DETAIL "A"

NOTE: BOLT ALL PANELS TO PILING WITH 3/4" Ø x 8" MACHINE BOLTS EXCEPT WHERE EYE-BOLTS ARE USED. 2 ~ STANDARD WASHERS REQ'D EACH BOLT.

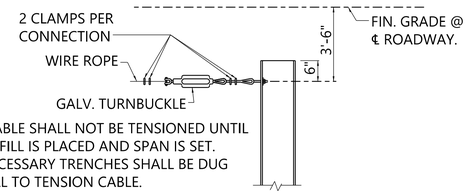

NOTE: CABLE SHALL NOT BE TENSIONED UNTIL BACKFILL IS PLACED AND SPAN IS SET. IF NECESSARY TRENCHES SHALL BE DUG IN FILL TO TENSION CABLE.

PART ELEVATION OF PILE ANCHOR

NOTE: THE CONTRACTOR SHALL HAVE THE OPTION OF ATTACHING THE TURNBUCKLE DIRECTLY TO THE U-BOLT ON THE ANCHOR PILE. IF THE CONTRACTOR USES THIS OPTION HE WILL BE REQUIRED TO DEMONSTRATE THAT THE DIRECT ATTACHMENT METHOD WILL MAINTAIN THE REQUIRED TENSION ON THE CABLE.

NOTE: AT THE POINT WHERE PRECAST CONCRETE PANELS COME IN CONTACT WITH PILING A PROTECTIVE COATING TO THE PILING SHALL BE APPLIED.

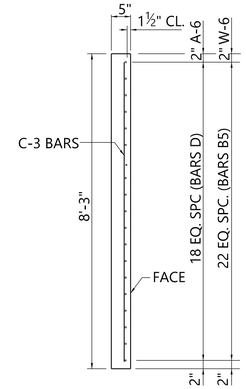

A-6 & W-6 PANEL SECTION

*NOTE: WHEN USED WITH 40' SPAN BRIDGE CHANGE TO 3'-6".

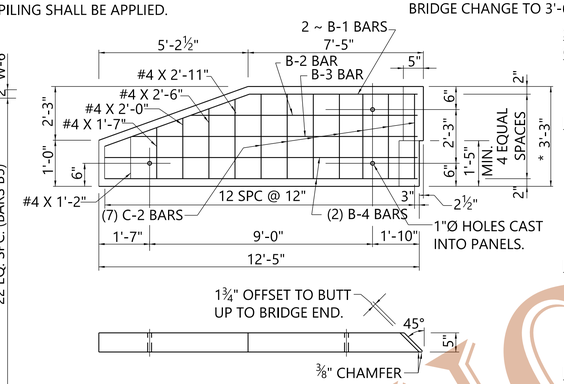

WING CAP PANEL

GENERAL NOTES

SPECIFICATIONS: ALABAMA DEPARTMENT OF TRANSPORTATION, CURRENT.

CONCRETE:
CONCRETE FOR PRECAST PANELS SHALL BE IN ACCORDANCE WITH SECTION 512 OF THE STANDARD SPECIFICATIONS. ALL EXPOSED CORNERS SHALL BE ROUNDED TO A ¼" RADIUS UNLESS OTHERWISE NOTED.

REINFORCING:
ALL REINFORCING STEEL SHOULD BE ACCURATELY LOCATED IN THE FORMS AND FIRMLY HELD IN PLACE AS REQ'D. BY ITEM 502.03 (C) 4 OF THE STANDARD SPECIFICATIONS. REINFORCING STEEL SHALL MEET THE REQUIREMENT OF SECTION 835 OF THE STANDARD SPECIFICATIONS. REINFORCING DIMENSIONS ARE TO THE ℄'S OF BARS UNLESS OTHERWISE NOTED. THE ABOVE STEEL WILL NOT BE PAID FOR DIRECTLY, BUT WILL BE CONSIDERED AS SUBSIDIARY TO THE ITEM OF PRECAST CONCRETE ABUTMENT PANELS.

HARDWARE:
ALL MACHINE BOLTS CONNECTING CONCRETE ABUTMENT PANELS TO PILING SHALL BE CONSIDERED INCIDENTAL TO THE WORK. ALL MACHINE BOLTS CONNECTING CONCRETE ABUTMENT PANELS TO PILING SHALL BE CONSIDERED INCIDENTAL TO THE WORK. ALL BOLTS SHALL CONFORM TO ASTM A-307 AND BE GALVANIZED IN ACCORDANCE WITH ASTM A-153.

BID ITEMS:
512-E PRECAST CONCRETE ABUTMENT PANELS, TYPE _____ EACH.
512-F PRECAST CONCRETE WING PANELS, TYPE _____ EACH.
512-G PRECAST CONCRETE ABUTMENT WING CAP PANELS _____ EACH.
507-A WIRE ROPE ABUTMENT ANCHOR ASSEMBLY - PER EACH.

DESIGN DATA:
A.A.S.H.T.O. 2002 STANDARD SPECIFICATIONS FOR HIGHWAY BRIDGES AND INTERIMS SERVICE LOAD DESIGN

NOTE!! IN CASTING PANELS (ABUTMENT, WING, WING CAP) , WELDED WIRE FABRIC CONFORMING TO THE REQUIREMENTS OF ARTICLE 835.03 FOR WELDED STEEL WIRE FABRIC STYLE 2 X 3 - W5X W5 IN EACH SIDE OF PANEL WITH 1" CLEAR, MAY BE USED IN LIEU OF REINFORCEMENT SHOWN.
THE FOLLOWING WELDED WIRE REINFORCEMENT SHEETS MAY BE USED AS A SUBSTITUTE FOR THE 2 X 3 W5 X W5 WELDED WIRE FABRIC:

2'-3" PANELS AND 4'-3" PANELS
LINE WIRES: 14--W10.0 OR D10.0 WIRES X 12'-8" LONG SPACED AS FOLLOWS: 2", 11 @ 4", 2"
CROSS WIRES: 26--W10.0 OR D10.0 WIRES X 4'-0" LONG @ 6" O.C.

3'-3" PANELS
LINE WIRES: 11--W10.0 OR D10.0 WIRES X 12'-8" LONG SPACED AS FOLLOWS: 2", 8 @ 4", 2"
CROSS WIRES: 26-- W10.0 OR D10.0 WIRES X 3'-0" LONG @ 6" O.C.

CUT THESE SHEETS AS REQUIRED TO USE ON ABUTMENT PANELS. THE ABOVE REINFORCEMENT TO CONFORM TO THE REQUIREMENTS OF AASHTO M221 AND M225.

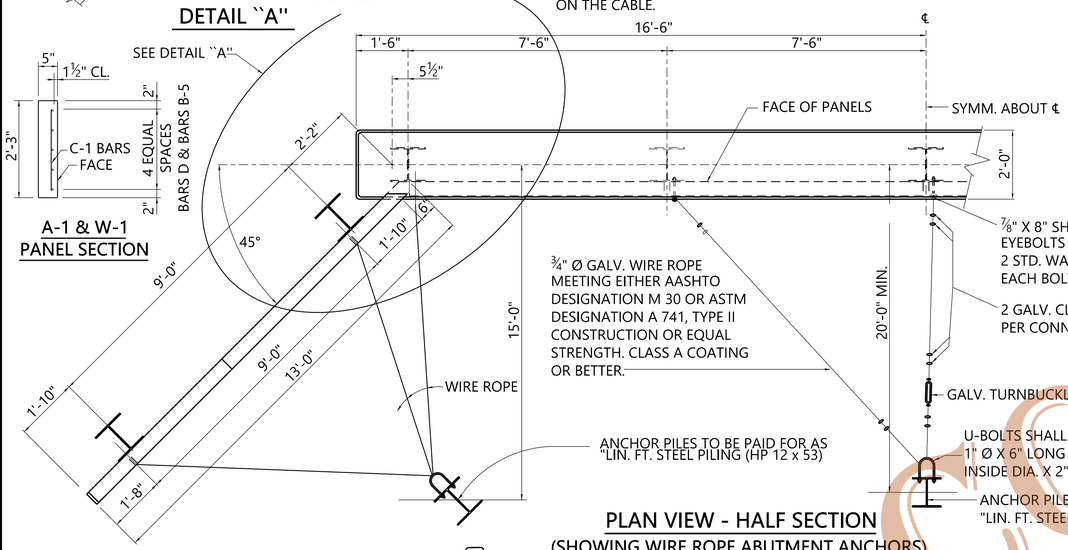

PLAN VIEW - HALF SECTION
(SHOWING WIRE ROPE ABUTMENT ANCHORS)

A-1 & W-1 PANEL SECTION

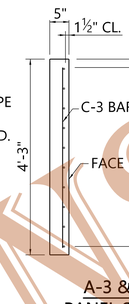

A-3 & W-3 PANEL SECTION

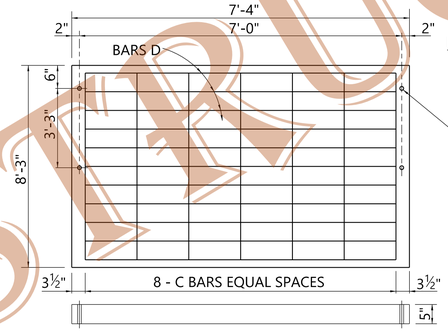

A-6 ABUTMENT PANEL

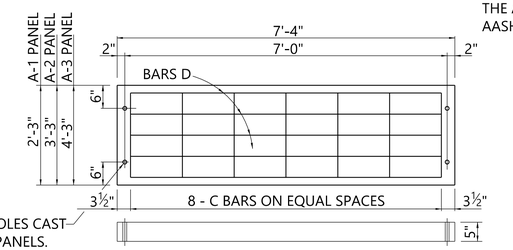

ABUTMENT PANEL

NOTE: "D" BARS USED ON ABUT. PANELS A-1, A-2 AND A-3.

2'-0"	C-1 BARS #4
3'-0"	C-2 BARS #4
4'-0"	C-3 BARS #4
8'-0"	C-6 BARS #4
7'-1"	D BARS #4

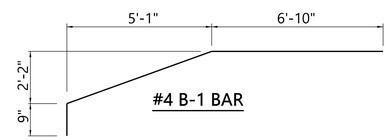

#4 B-1 BAR

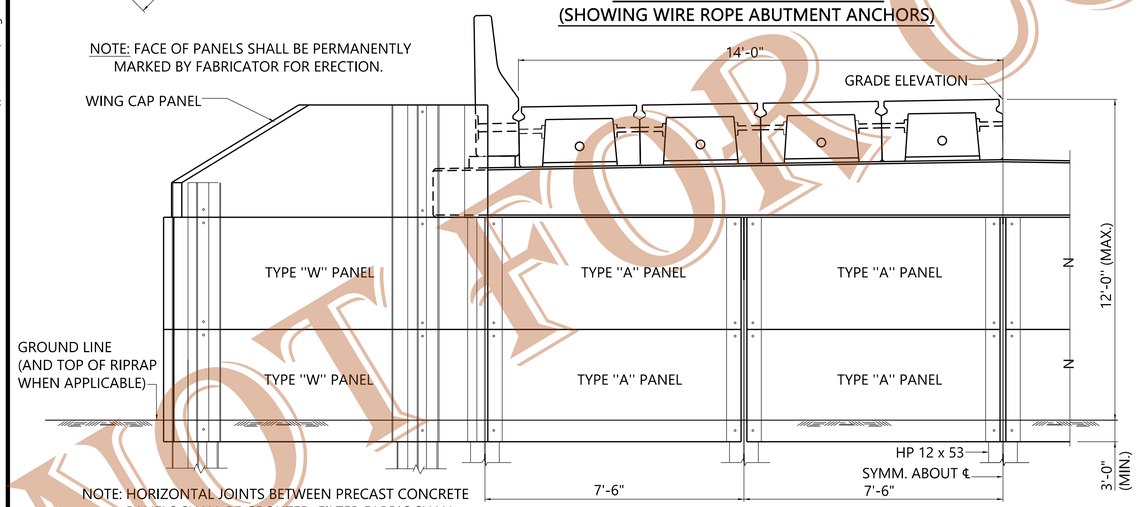

NOTE: HORIZONTAL JOINTS BETWEEN PRECAST CONCRETE PANELS SHALL BE GROUTED. FILTER FABRIC SHALL BE PLACED BETWEEN FILL AND JOINTS.

HALF ELEVATION

NOTE: HOLES TO BE DRILLED IN PILES FOR ATTACHING CONCRETE PANELS.

NOTE: REFERENCE BRIDGE DRAWINGS FOR PANELS TYPE "A" AND "W".

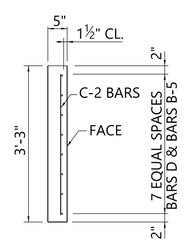

A-2 & W-2 PANEL SECTION

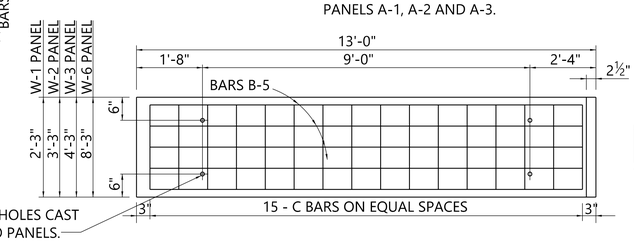

NOTE: TYPICAL INSTALLATION OF B-2, B-3, B-4 & B-5 BARS

NOTE: B-5 BARS USED ON WING PANELS W-1, W-2, W-3 & W-6.

WING PANEL

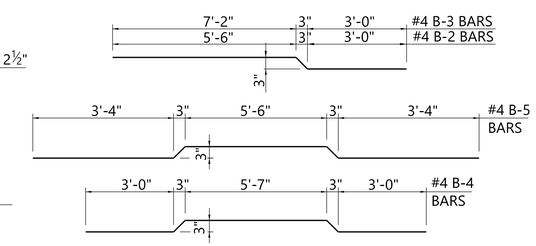

ASSISTANT BRIDGE ENGINEER	BRIDGE ENGINEER
1/6/22 DATE	1/7/2022 DATE

ALABAMA DEPARTMENT OF TRANSPORTATION

ALDOT ORIGINAL CONTRACT DRAWINGS BRIDGE BUREAU

REVISIONS

THIS BRIDGE SPECIAL PROJECT DRAWING FOR USE ONLY ON:
PROJECT NO. _____
COUNTY(S) _____

THESE DRAWINGS REPRESENT DESIGNS PREPARED FOR USE BY THE ALABAMA DEPARTMENT OF TRANSPORTATION AND ARE NOT TO BE COPIED, REPRODUCED, ALTERED, OR USED BY ANYONE, OR ANY ORGANIZATION, WITHOUT THE EXPRESSED WRITTEN CONSENT OF THE ALABAMA DEPARTMENT OF TRANSPORTATION REPRESENTATIVE AUTHORIZED TO APPROVE SUCH USE. ANYONE MAKING UNAUTHORIZED USE OF THESE DRAWINGS MAY BE PROSECUTED TO THE FULLEST EXTENT OF THE LAW.

PRECAST CONCRETE ABUTMENT PANELS FOR USE WITH 24', 34' OR 40' PRECAST CONCRETE BRIDGE SLABS 28'-0" CLEAR ROADWAY 6', 7', 8' & 9' HEIGHT WITH STEEL PILING

BRIDGE SPECIAL PROJECT DRAWING

PCP-2800

SHEET 1 OF 1

NOT FOR CONSTRUCTION

\\brvms002\BridgeStandardandSpecial\Bridge Special DGN Files\2022 DGN\Precast\PCP2800.dgn
PLOTTED: 27-Dec-21 at 11:16