REFERENCE PROJECT NUMBER	FISCAL YEAR	SHEET NUMBER

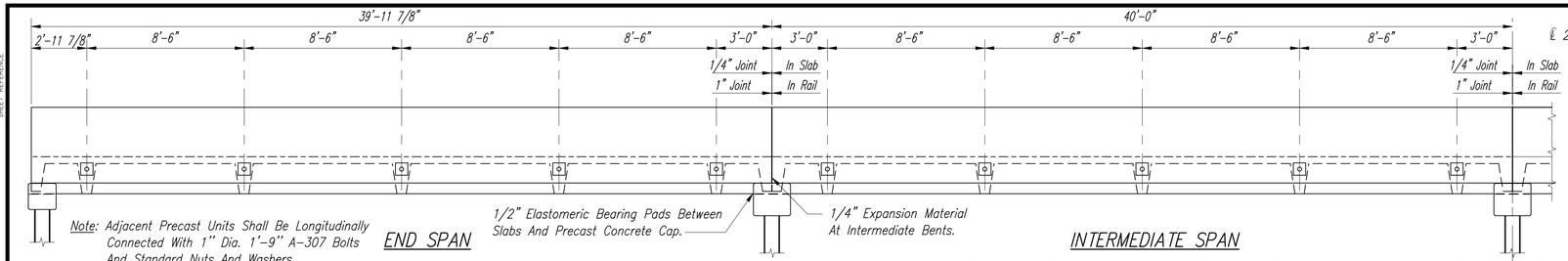

Note: Adjacent Precast Units Shall Be Longitudinally Connected With 1" Dia. 1'-9" A-307 Bolts And Standard Nuts And Washers.

END SPAN

INTERMEDIATE SPAN

ELEVATION

Note: Screw Anchor Assembly Design Load = 50 Kips Tension. Precast Manufacturer Certifications Validating That Furnished/Properly Installed Screw Anchor Assembly Is Capable Of Developing Twice The Specified Design Load (100 Kips) Shall Be Submitted To The Project Engineer Prior To Barrier Rail Installation.

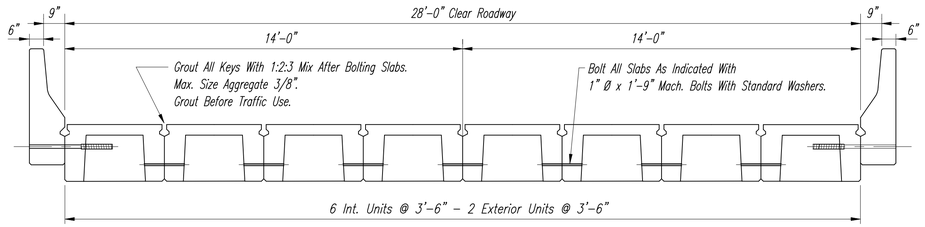

SECTION OF ROADWAY

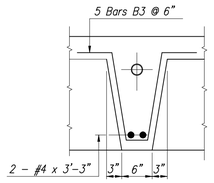

SECTION A-A

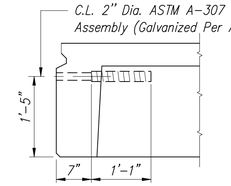

BARRIER ANCHOR DETAIL

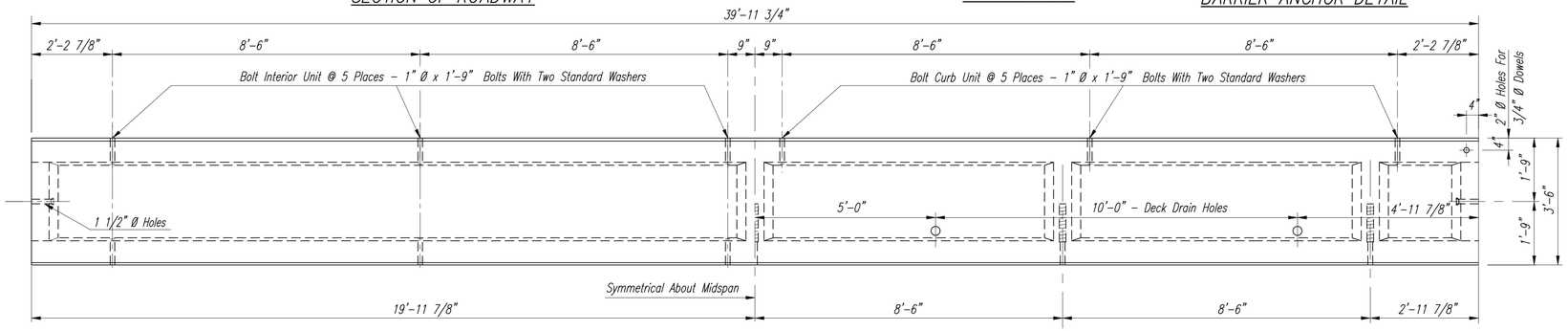

HALF PLAN - INTERIOR UNIT

HALF PLAN - EXTERIOR UNIT

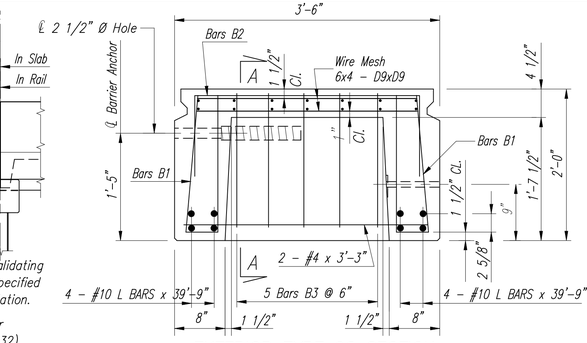

EXTERIOR TYPE 2C SECTION

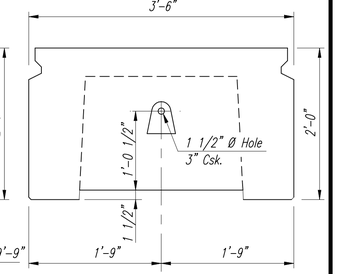

END ELEVATION

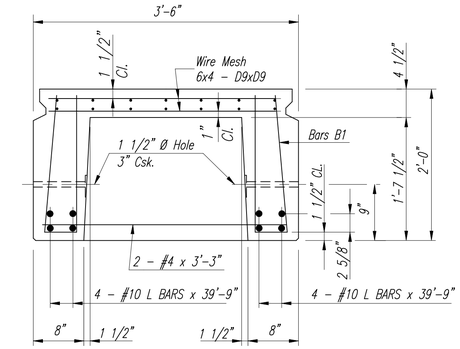

INTERIOR TYPE 1 SECTION

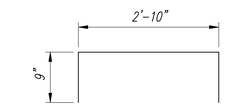

BARS B2 - #3

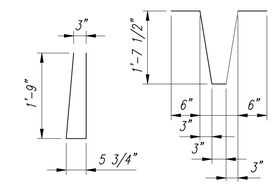

BARS B1 - #3 BARS B3 - #3

BAR BENDING DETAILS

Dimensions Are Out To Out

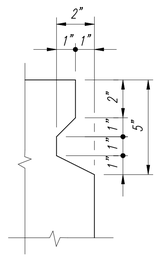

KEY DETAIL

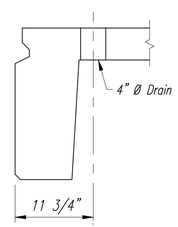

SECTION AT DRAIN

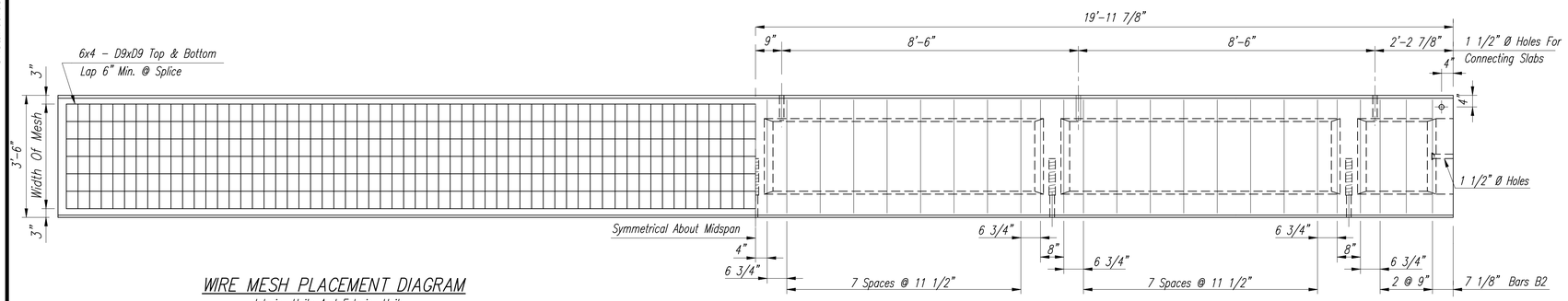

WIRE MESH PLACEMENT DIAGRAM

Interior Units And Exterior Units

HALF PLAN - EXTERIOR UNIT

Showing Additional Top Reinforcing Steel

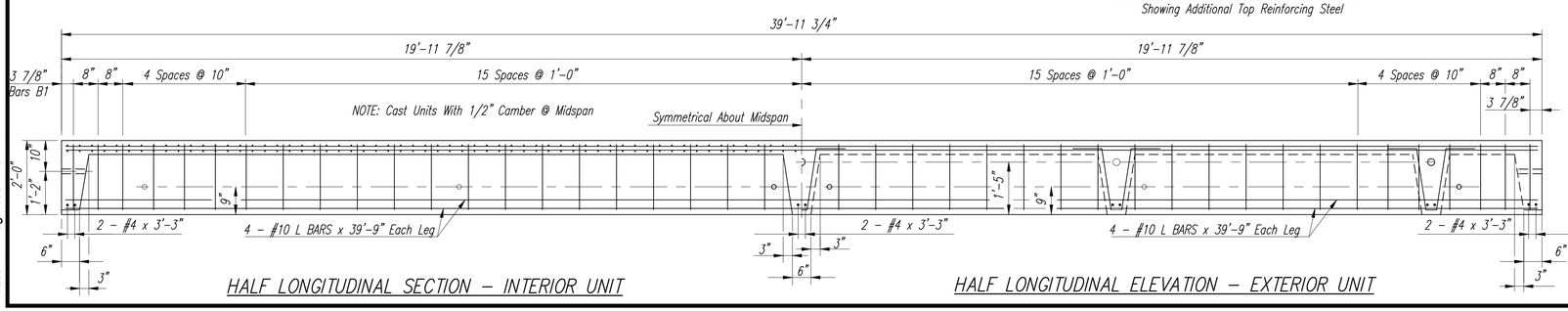

HALF LONGITUDINAL SECTION - INTERIOR UNIT

HALF LONGITUDINAL ELEVATION - EXTERIOR UNIT

GENERAL NOTES:

1. SPECIFICATIONS: Alabama Department Of Transportation, Current Edition.
2. STEEL REINFORCEMENT: Reinforcing Steel Shall Meet The Requirements Of Section 835 Of The Standard Specifications.
   L-Bars-----Shall Be Grade 60
3. WELDED FABRIC: Shall Conform To The Requirements For Welded Steel Wire Reinforcement, Section 835 Of The Standard Specifications. Also Shall Conform To The Requirements Of AASHTO M221 And M225.
4. EXPANSION JOINTS: Joint Filler To Be AASHTO M-213 Modified. Sealed In Accordance With Subarticle 832.02(c)
5. CONCRETE: Concrete Shall Conform To Section 512 Of The Standard Specifications. Compressive Stregth Shall Be 4,500 p.s.i. Min.
6. HARDWARE: All Bolts Shall Conform To ASTM A-307 And Be Galvanized In Accordance With AASHTO M-232.

DESIGN DATA:

Specifications:.....A.A.S.H.T.O., 1992 And Interims.
Design Loading:.....HS 20-44
f_s = 24,000 p.s.i.; f_m = 30,000 p.s.i.; f_c = 1,800 p.s.i.; n = 8

THESE DRAWINGS REPRESENT DESIGNS PREPARED FOR USE BY THE ALABAMA DEPARTMENT OF TRANSPORTATION; AND ARE NOT TO BE COPIED, REPRODUCED, ALTERED, OR USED BY ANYONE, OR ANY ORGANIZATION, WITHOUT THE EXPRESSED WRITTEN CONSENT OF THE ALABAMA DEPARTMENT OF TRANSPORTATION REPRESENTATIVE AUTHORIZED TO APPROVE SUCH USE. ANYONE MAKING UNAUTHORIZED USE OF THESE DRAWINGS MAY BE PROSECUTED TO THE FULLEST EXTENT OF THE LAW.

DESIGN SECTION SUPERVISOR

ASSISTANT BRIDGE ENGINEER

BRIDGE ENGINEER

ALABAMA DEPARTMENT OF TRANSPORTATION

THIS STANDARD TO BE USED WTH ANY OF THE FOLLOWING STANDARDS

REVISIONS

STANDARD

40 FT. PRECAST CONCRETE SPAN 28'-0" CLEAR ROADWAY

ESTIMATED QUANTITIES		STANDARD DWG. NO.
COMPUTED BY:		PC-40
VERIFIED BY:		
CHECKED BY:	DRAWN BY:	DESIGNED BY:
DATE CHECKED:	DATE DRAWN:	SCALE:
		SHEET NO. 1 OF 1

U:\Standards\Precast\ALDOT Precast Standards\2010 Book\PC40.dgn
Plotted: 21-Aug-2009 12:02 PM